REVISIONS				
REV.	ECO	DESCRIPTION	DATE	INITIALS
A		NEW RELEASE	8/22/2025	

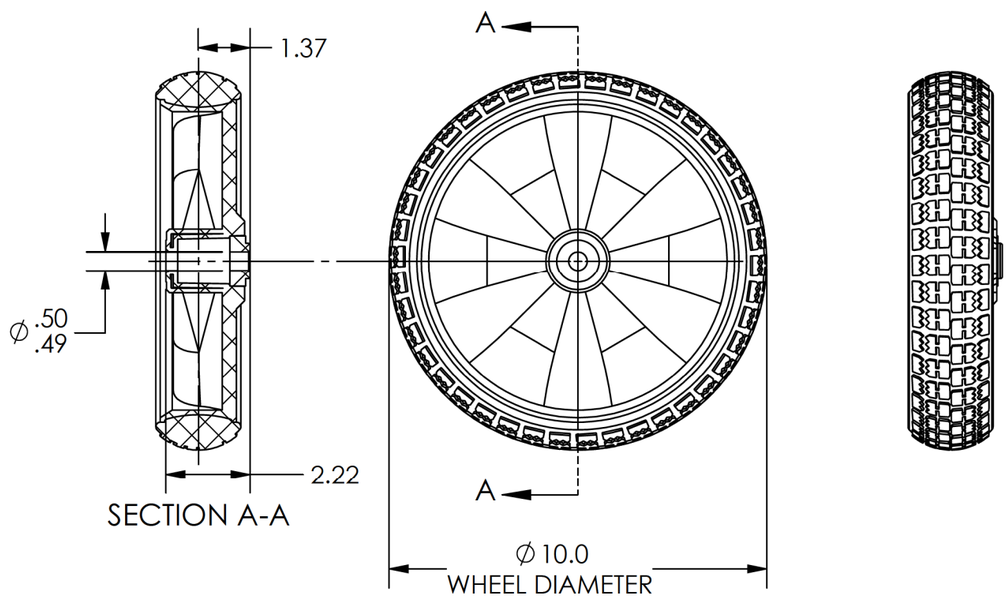

IN WORK
DO NOT USE

UNLESS OTHERWISE SPECIFIED		NAME	DATE
DIMENSIONS ARE IN INCHES	DRAWN	-	-
TOLERANCES:	ENG APPR.	-	-
FRACTIONAL ±1/16			
ANGULAR: MACH ±0.1 BEND ±1			
TWO PLACE DECIMAL ±0.06			
THREE PLACE DECIMAL ±0.03			
DO NOT SCALE DRAWING			

Wheel - Solid Plastic
(01.03.90.003610031)

P/N: 70-041-1405

SIZE	DWG. NO.	REV.
B	DWG-00699	A
SCALE:1:4	WEIGHT: lbs.	SHEET 1 OF 1